The creation and sending of an enhanced e-mail message according to the present invention, as well as initial receipt of an enhanced e-mail message prior to a user event, will now be described with respect to Figures 10 and 11.

FIGS. 10-10B illustrate the process of creating and transmitting an enhanced e-mail message with a container attachment that is self opening and has the other characteristics described herein. In step 62, header information is first designated to define the container. Thereafter, component definitions are created by the sender in a step 64. There can be any number of component definitions desired, with it being understood that the more definitions that exist, the larger the size of the attachment that will ultimately be transmitted. Thereafter, sub-component definitions can be created for each component object, as described previously, is step 66. In step 68, the component and sub-component files are combined into an ActiveView file, which thereafter is combined with header information and attachments to create a container file in step 70. The container file is encrypted in step 72. Once being encrypted, in the preferred embodiment, the Java class files, collectively termed the recipient executable software, and the native stub are attached to the encrypted container file in step 78. Mime encoding follows in step 80, which mime encoded file is then attached to an e-mail message in step 80 and transmitted.

Upon receipt at the recipient computer in step 84 with reference to FIG. 11, double clicking the received message in step 86 if on a java virtual machine will cause self opening to occurs in step 88, or, alternatively, opening the container attachment. Thereafter, the files are extracted from the attachment in step 90 and invocation of the application (the java virtual machine and the java class files) and extraction of the senders container data files in step 94 will cause the display of the container in step 96. Thereafter, in step 98, the computer 30 awaits the recipients action, as will be further described hereinafter.

As a result, of the display on the display 38 of the recipient computer 30, a container, such as the envelope container 100 illustrated in FIG. 12 is obtained. At this time, the recipient executable software then proceeds to a state in which it waits for the user to take an action, as will now be described with respect to FIG. 13.

In step 110, a first event takes place. Step 112 follows and a determination is made in step 112 as to whether the event that takes place is an event that is directed to one or more object components. If it is not such an event, then step 114 follows and the recipient executable software does nothing, and waits for a next event in step 120. Types of nothing events would be, for instance, if the mouse cursor 122 illustrated in FIG 12. moves to an area that is not over any object component.

If, however, step 112 determines that the event is directed to a component object/Voxel, then step 116 follows and it is determined which component objects have events, and then in step 118 the action associated with the event intended for each component object takes place.

For instance, if component object 102 illustrated in FIG. 12 contains an User Action of FIG. 9 in the form of a mouse over, then the action of placing the mouse cursor 122 over the component object 102 will cause in step 112 a determination is made that the action involves a component object, and in step 116 a determination that the action pertains to component object 102. Thereafter, step 116 to results and the actions associated with that event will be executed. A specific example of such events will be provided hereinafter.

FIG. 14 illustrates one functional attribute of the present invention, which functional attribute can be set forth at the initiation of receiving an enhanced e-mail message according to the present invention, or after the initiation of an action stemming from a component object. An event 124 initiates the conditional display of contents functional attribute. If this conditional display of contents functional attribute occurs at the initiation of the enhanced e-mail message, step 126 follows and the enhanced e-mail message is opened as an attachment, as has been previously described. Step 128 follows, in which terms and conditions which must be agreed upon are first made known to the recipient. Thereafter, step 130 follows and the recipients response is reported back to the sender, in a manner using some form of return receipt as will be described hereinafter. If the conditions responded to in a manner deemed appropriate by the sender, then step 132 follows, and the appropriate contents are then made accessible to the recipient. Step 134, which follows thereafter, waits for another event to occur, as has been previously described with reference to FIG. 13.

FIG. 15 illustrates another functional attribute of the present invention, referred to as a return receipt. If a return receipt is requested by the sender, step 136 is initiated at an appropriate time. This could be when the attachment that forms the enhanced e-mail according to the present invention is initially transmitted to the recipient, when the recipient closes the enhanced e-mail that has been received, or it can be triggered by an event that relates to a sub-component of a component object according to the present invention. If the sender did not request a return receipt when initially sending the message, then step 140 follows, no action is taken, and then step 142 waits for another event to occur, as has been previously described with reference to FIG. 13. If, however, sender requested a return receipt, step 144 follows and a determination is made whether a specific format of response was requested. If not, step 146 follows and a default response, such as "xyz@abc.com has opened the envelope at 10:pm pacific daylight time" is transmitted, this response being delivered using the sender address information, and other time information on the system. Step 148 follows and the computer 30

waits for another event to be initiated by the recipient, as has been previously described with reference to FIG. 13.

If a specific format of response was requested in step 144, then step 150 follows and determination is made whether the sender's request requested a specific input from the recipient type of response. If it did not, then the senders configured response is sent in step 152 to addressee specified by the sender, which may be the senders own e-mail address, the address of another, or the address of many others. Thereafter a step 154, like step 148 previously described, follows.

If a response from recipient was requested, then the requested response is made known in step 156 and collected and compiled in step 158. Thereafter, the recipient's response is automatically transmitted in step 160 and another wait step 162 follows.

The return receipt responses transmitted back to the sender in steps 146, 152, and 160 are each automatically sent using the API provided by respective e-mail clients. For SMTP, routines to send mail can be written using public domain information.

FIGs. 16A, 16B1-16B2 and 16C1-16C4 illustrate example data structures for an envelope container having a company logo as an object component according to the invention. FIGs. 17A-17D illustrate views and actions that result from the data structures such as set forth in FIGS. 16A, 16B1-16B2 and 16C1-16C4. So that the capabilities of the present invention can be appreciated, it should be noted that FIG. 17A is represented by the data structure of FIGS. 16a, 16C1 and 16C2; FIG. 17B is represented by the data structure in FIG. 16A; FIG. 17C is represented by the data structure in FIG. 16C3; and FIG. 17D is represented by the data structure in FIG. 16C4.

Of particular note, a mouse over 180 in FIG. 17A results in a bubble 180-A, which corresponds to data associated with the bubble as defined by mouse over action if FIG. 16C1 that has a text sub-component. Similarly, FIG. 16C2 data defines that the mouse over 182 will cause a process launch attribute that will result in audio music being played by a program containing program instructions to launch the audio content, which programs can also have been transmitted from the sender with the originally sent enhanced e-mail message.

A digital time stamp 184 is also included and indicates either sender transmission time or, in the alternative, a certified time stamp from a dedicated time stamp server. Object components 185-204 are also illustrated on both sides of the envelope, and represent the ability of the present invention to depict, as desired by the user, many different forms, in many different manners, as well as attributes that then lead to the recipient to other areas. For instance, Figure 16C3, when a mouse click over the stamp object component 186 occurs, if the user is on-line at the time, will result in the user automatically being connected to the home page 206 illustrated in FIG. 17A. If, however, that mouse click over the stamp object

component 186 occurs, but the user is off-line, then the FIG. 16C3 primary sub-component is not used, but the alternate sub-component identified by FIG. 15C4 is launched, which in this case results in a textual message being displayed.

The above example is intended to show how robust the enhanced e-mail message enhancement apparatus according to the present invention actually is. By being able to be sent as an attachment through e-mail, the appearance of the e-mail message can be enhanced at the option of the sender, and the recipient will be ensured of being able to receive it in the intended form, since the executable recipient program instructions are preferably transmitted as part of the attachment.

Furthermore, even though the executable recipient program instructions can ensure receipt of the message in its intended form, the architecture of the present invention also provides that if a more robust program or hardware element exists on the recipient computer 30, which can even further enhance the content that is transmitted by the sender, then that more robust program or hardware element exists on the recipient computer 30 can be used instead of the executable recipient program instructions that were transmitted by the sender.

While the invention has been particularly shown and described with reference to the preferred embodiments, it will be understood by those skilled in the art that various changes in form and detail may be made therein without departing from the spirit and scope of the present invention.

We claim:

1. A method of processing an e-mail message that includes a representation of an envelope containing a time stamp on a computer screen of a computer, said method comprising the steps of:

receiving, at said computer, said e-mail message that includes said representation of said envelope containing said time stamp;

rendering on said computer screen, using said computer, a representation of a front of said envelope;

rendering on said computer screen, using said computer, a representation of said time stamp at a screen location that is within the front of the envelope;

causing, upon initiation of a user action when a cursor is positioned on said computer screen at a screen location corresponding to that of said time stamp, said computer to connect with a location associated with said time stamp.

2. A method according to claim 1 wherein said step of causing said computer to connect with said location associated with said time stamp uses a uniform resource locator to determine said location.

3. A method according to claim 1 wherein said step of rendering said envelope renders said envelope front so that it is rectangular in shape and said time stamp is located on the upper right hand corner of said rectangular envelope.

4. A method according to claim 3 wherein said e-mail message further includes a stamp, said stamp being displayed on said screen at the upper right hand corner of said rectangular envelope such that said time stamp overlaps said stamp, and said method further comprises the step of:

causing, upon initiation of another user action when said cursor is positioned on said computer screen in another screen location corresponding to that of said stamp, said computer to connect with another location associated with said stamp.

5. A method according to claim 4 wherein said step of causing said computer to connect with said another location associated with said stamp uses another uniform resource locator to determine said location.

6. A method according to claim 1 wherein said step of causing is performed by execution of executable software that is received by said computer with said e-mail message.

7. A method according to claim 1 wherein said e-mail message further includes textual content, said textual content being represented by an object on said envelope, and further comprising the step of causing, upon initiation of another user action when said cursor is positioned on said computer screen in another screen location corresponding to that of said object, said computer to display said textual content.

8. A method according to claim 7 wherein, upon initiation of said another user action causing said computer to display said textual content, said another user action also causes the steps of:

generating an electronic response indicating said textual content has been displayed by said computer; and

transmitting said generated electronic response.

9. A method according to claim 1, wherein each of said envelope front and said time stamp have an associated component identifier which said computer uses when rendering said envelope front and said time stamp.

10. A method according to claim 9, wherein each of said envelope front and said time stamp have associated component height data and component width data which said computer uses when rendering said envelope front and said time stamp.

11. A method according to claim 10, wherein each of said envelope front and said time stamp have associated vertical screen location data and horizontal screen location data which said computer uses when rendering said envelope front and said time stamp.

12. A method according to claim 10, wherein said envelope time stamp has an associated sub-component identifier which said computer uses during said step of causing said computer to connect with said another location associated with said stamp.

13. A method according to claim 1 wherein said time stamp provides both a date and a time.

14. A method according to claim 13 wherein said time stamp is provided from a time stamp server.

15. A method according to claim 1 wherein said e-mail message further includes another object, said object being displayed on said screen and said method further comprises the step of:

causing, upon initiation of another user action when said cursor is positioned on said computer screen in another screen location corresponding to that of said object, said computer to produce audio tones.

16. A method according to claim 1 wherein said e-mail message further includes another object, said object being displayed on said screen and said method further comprises the step of:

causing, upon initiation of another user action when said cursor is positioned on said computer screen in another screen location corresponding to that of said object, said computer to play a video.

17. A method of processing an e-mail message that includes a representation of an envelope containing a sender identity identification on a computer screen of a computer, said method comprising the steps of:

receiving, at said computer, said e-mail message that includes said representation of said envelope containing said sender identity;

rendering on said computer screen, using said computer, a representation of a front of said envelope;

rendering on said computer screen, using said computer, a representation of said sender identity identification at a screen location that is within the front of the envelope;

causing, upon initiation of a user action when a cursor is positioned on said computer screen at a screen location corresponding to that of said sender identity identification, said computer to connect with a location associated with said sender identity identification

18. A method according to claim 17 wherein said step of causing said computer to connect with said location associated with said sender identity uses a uniform resource locator to determine said location.

19. A method according to claim 17 wherein said e-mail message further includes a time stamp, and said method further comprises the step of:

causing, upon initiation of another user action when said cursor is positioned on said computer screen in another screen location corresponding to that of said time stamp, said computer to connect with another location associated with said time stamp.

20. A method according to claim 19 wherein said step of causing said computer to connect with said another location associated with said time stamp uses another uniform resource locator to determine said location.

21. A method according to claim 17 wherein said step of rendering said envelope renders said envelope front so that it is rectangular in shape, said sender identity identification is located on the upper left hand corner of said rectangular envelope and said time stamp is located on the upper right hand corner of said rectangular envelope.

22. A method according to claim 19 wherein said e-mail message further includes a stamp, said stamp being displayed on said screen at the upper right hand corner of said rectangular envelope such that said time stamp overlaps said stamp and said method further comprises the step of:

causing, upon initiation of a further user action when said cursor is positioned on said computer screen in another screen location corresponding to that of said stamp, said computer to connect with another location associated with said stamp.

23. A method according to claim 17 wherein said sender identity is represented as one of a logo and an address.

24. A method according to claim 17 wherein said e-mail message further includes a request for a configured response, said request for said configured response being represented by an object on said envelope, and method further comprising the steps of:

causing, upon initiation of another user action when said cursor is positioned on said computer screen in another screen location corresponding to that of said object, said computer to display said request for configured response;

compiling of said configured response entered into said computer by said user; and

transmitting said compiled configured response from said computer.

25. A method of presenting, on a screen of a second computer that uses a second e-mail platform, information to a recipient that has been electronically transmitted as an e-mail message from a first computer using a first e-mail platform to said second computer and receiving at said first computer from said second computer a return receipt comprising the steps of:

forming a data file representing said information as a plurality of objects, some of said objects having associated therewith digital images and certain of said objects having associated therewith a plurality of initiable sub-components, said initiable sub-components being initiated

by a user action, each of said plurality of objects having an associated component identifier which said computer uses to rendering visual portions of said objects;

creating executable software that can cause said information to automatically present itself on said screen of said second computer, generate a return receipt indicating that said information has been presented and cause said digital images to be rendered;

creating an e-mail message file by combining together said executable software and said data file;

electronically transmitting said e-mail message file from said first computer to said second computer;

automatically presenting said information on said screen of said second computer;

generating, at said second computer and using said executable software and said second e-mail platform, said return receipt; and

receiving, after transmission of said return receipt, said return receipt at said first computer, thereby indicating that said information has been presented to said recipient.

26. The method according to claim 25 wherein said user action is one of a mouse-over, a mouse click and a mouse double click, which action occurs when a cursor is located over one of said certain objects and which action causes another electronic response.

27. The method according to claim 25 wherein said user action is one of a mouse-over, a mouse click and a mouse double click, which action occurs when a cursor is located over one of said certain objects and which action causes audio tones to be produced.

28. The method according to claim 25 wherein said user action is one of a mouse-over, a mouse click and a mouse double click, which action occurs when a cursor is located over one of said certain objects and which action causes a video to be played.

29. The method according to claim 25 wherein said user action is one of a mouse-over, a mouse click and a mouse double click, which action occurs when a cursor is located over one of said certain objects and which action causes another digital image to be presented.

30. The method according to claim 25 wherein said user action is one of a mouse-over, a mouse click and a mouse double click, which action occurs when a cursor is located over one of said certain objects and which action causes said computer to connect with a location associated with said one of said certain objects.

31. A method according to claim 25, wherein certain of said initiable sub-components will result in different actions, one action occurring if the second computer is on-line and another action occurring if the second computer is off-line.

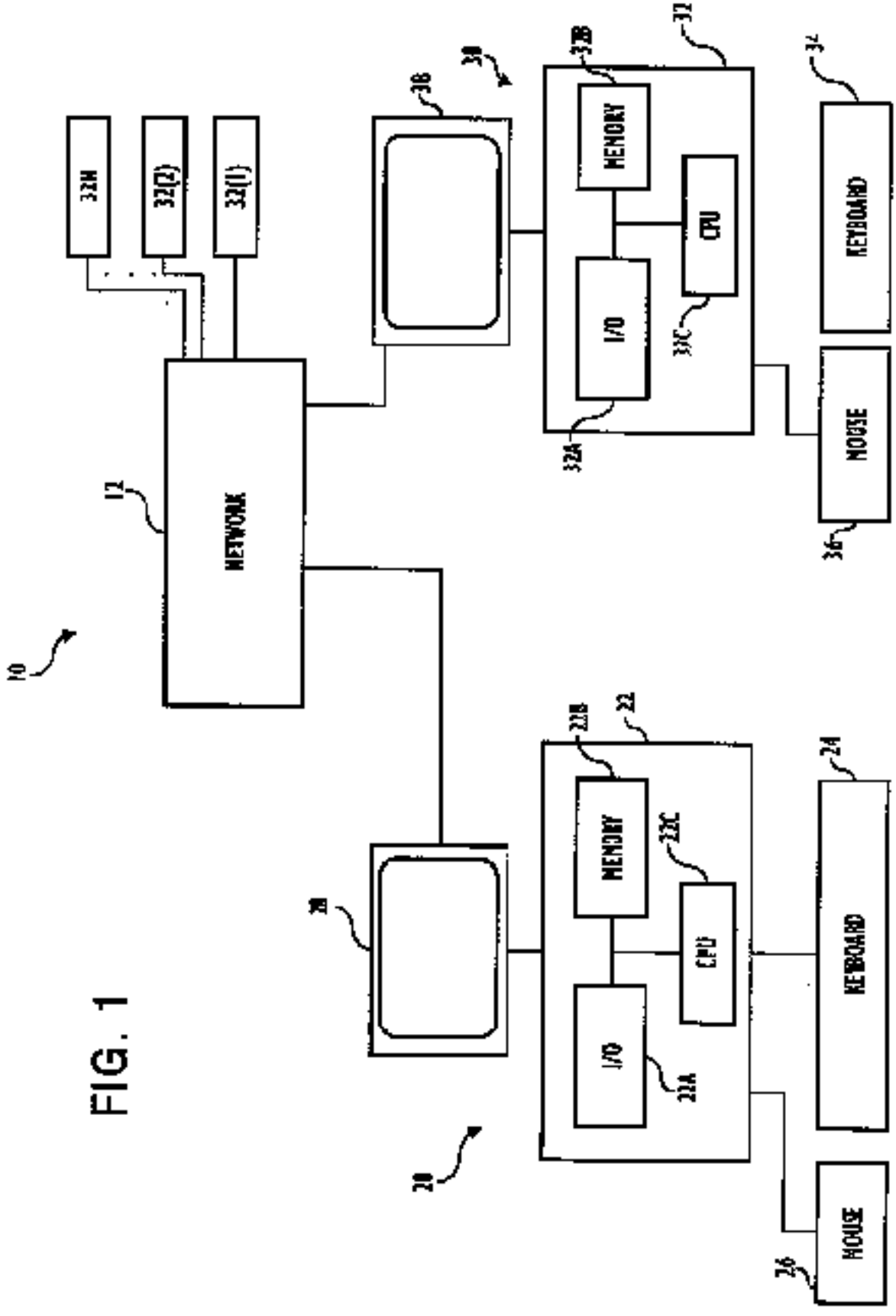
10
12
NETWORK
32N
32(2)
32(1)
38
30
32
32B
MEMORY
CPU
I/O
32C
32A
34
KEYBOARD
MOUSE
36
20
22
22B
MEMORY
22C
CPU
I/O
22A
24
KEYBOARD
MOUSE
26

FIG. 1

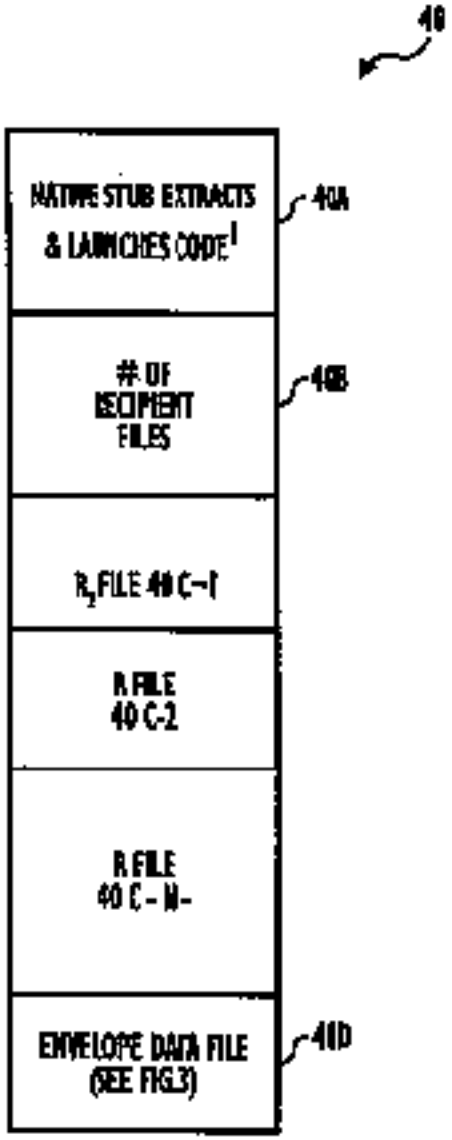
40
NATIVE STUB EXTRACTS & LAUNCHES CODE
40A
OF RECIPIENT FILES
40B
R1 FILE 40 C-1
R FILE 40 C-2
R FILE 40 C - N-
ENVELOPE DATA FILE (SEE FIG.3)
40D

FIG. 2

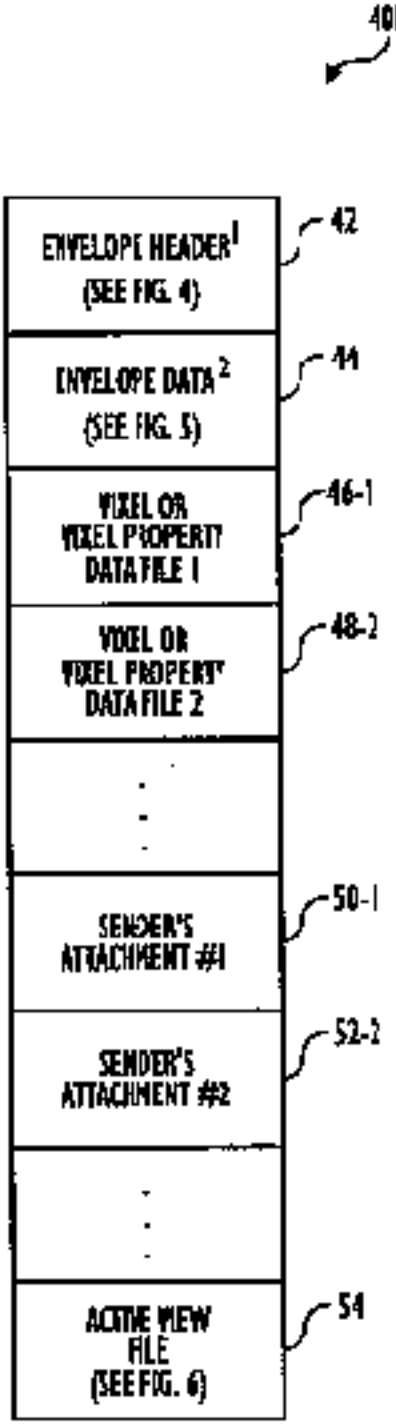
40D
ENVELOPE HEADER[1] (SEE FIG. 4)
42
ENVELOPE DATA[2] (SEE FIG. 5)
44
VIXEL OR VIXEL PROPERTY DATA FILE 1
46-1
VIXEL OR VIXEL PROPERTY DATA FILE 2
48-2
SENDER'S ATTACHMENT #1
50-1
SENDER'S ATTACHMENT #2
52-2
ACTIVE VIEW FILE (SEE FIG. 6)
54

FIG. 3

```
/*
PROGRAMMER'S NAME : HARESH GURABATHI
DATE              : 04/29/1996
PROJECT NAME      : ENVELOPE.MAK
FILE NAME         : ENVPHEAD.H

    HEADER DEFINITION FOR ENVELOPE FILE
*/

#INCLUDE "SSDEFINE.H"
#INCLUDE "WINDOWS.H"

#IFNDEF _ENVPHEAD_H__
#DEFINE _ENVPHEAD_H__

TYPEDEF STRUCT TAGENVELOPEHEADER
{
  UNSIGNED SHORT SSIZE;
  CHAR CMAJORVERSION;
  CHAR CMINORVERSION;
  SHORT SDATATYPE;
  WORD USESECURITYATTRIBUTES:          // UINT IN 16 BIT ENVELOPE
  WORD USESECURITYMETHODSATTRIBUTES:   // UINT IN 16 BIT ENVELOPE
  WORD UENVELOPEATTRIBUTES;            // UINT IN 16 BIT ENVELOPE
  STR31 SZPLAYERNAME;     // C STRING

  WORD UCOMMAND;                       // UINT IN 16 BIT ENVELOPE
  STR255 SZVALUE;              // COULD BE THE NVL, C-STRING

  STR31 SZSENDERNAME; // C STRING
  STR31 SZPACKAGENAME; // C STRING

    // NEW FOR HALLMARK
  UNSIGNED LONG SRESERVEDDATALENGTH;
  UNSIGNED LONG SRESERVEDDATAOFFSET; //RESERVED DATA COMES AFTER SLIP DATA BUT BEFORE COMPONENT DATA
```

FIG. 4(a)

```
  UNSIGNED SHORT  STEMPLATETYPE;   // 1: VANILLA
                  // 2: CUSTOM
  UNSIGNED LONG SCOMPONENTDATALENGTH;
  UNSIGNED LONG SCOMPONENTDATAOFFSET;     // COMPONENT DATA COMES AFTER RESERVED DATA
}

ENVELOPEHEADER;

ENUM {
  SECURITYATTR_NOTSECURED   = 0x0000,
  SECURITYATTR_SECURED    = 0x0001,
  SECURITYATTR_WASSECURED   = 0x0002,
};

ENUM {
  ENEVELOPEATTR_CLEAN   = 0x0000,
  ENEVELOPEATTR_SENT   = 0x0001
      };

ENUM {
  SECURITYMETHOD_RC4          = 0x0001,
  SECURITYMETHOD_RC4_MAC    = 0x0002,
};

ENUM {
  COMMAND_LAUNCH          = 0x0001,
  COMMAND_JAVA          = 0x002,
  COMMAND_FETCHURL      = 0x0004
};

#ENDIF    // _ENVPHEAD_H__


#DEFINE APP_MINOR_VERSION 0
#DEFINE APP_MINOR_VERSION 1
```

FIG. 4(b)

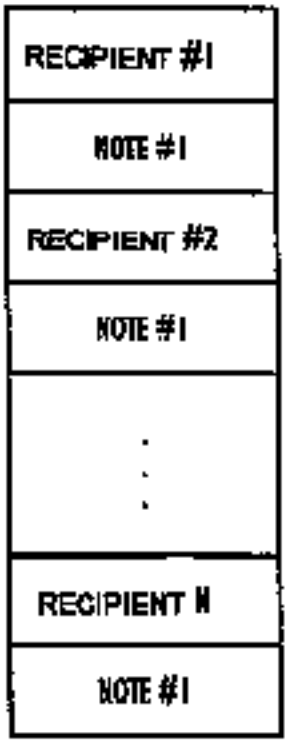

FIG. 5

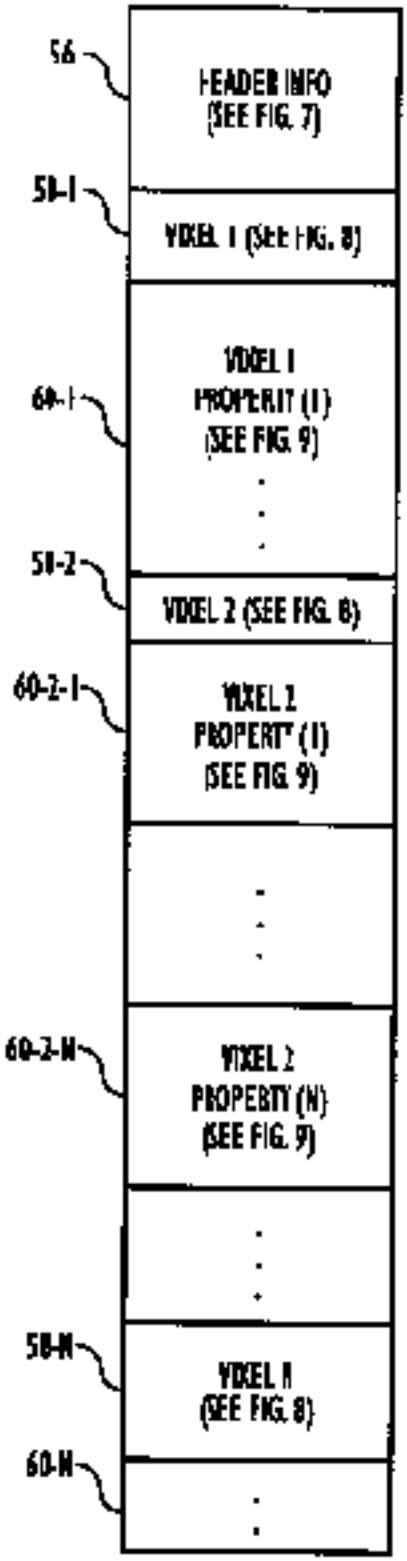
56
HEADER INFO
(SEE FIG. 7)
58-1
VOXEL 1 (SEE FIG. 8)
60-1
VOXEL 1
PROPERTY (1)
(SEE FIG. 9)
58-2
VOXEL 2 (SEE FIG. 8)
60-2-1
VOXEL 2
PROPERTY (1)
(SEE FIG. 9)
60-2-N
VOXEL 2
PROPERTY (N)
(SEE FIG. 9)
58-N
VOXEL N
(SEE FIG. 8)
60-N

FIG. 6

FIELD	LENGTH	VALUES
CHECKSUM	4 BYTES	
HEADER LENGTH	4 BYTES	
VERSION	4 BYTES	
FILE INFORMATION SIZE	4 BYTES	
FILE INFORMATION	VARIABLE	EX. "PLATINUM ENVELOPE"
CREATOR INFORMATION SIZE	4 BYTES	
CREATOR INFORMATION	VARIABLE	EX. "AMERICA ONLINE"
CONTAINER TYPE	4 BYTES	1 ENVELOPE 2 POSTCARD 3 NEWSLETTER 4 CD 5 ROLLED UP NEWSPAPER 6 STACK OF CARDS 7 COUPON
FRONT COLOR (RED)	2 BYTES	
FRONT COLOR (GREEN)	2 BYTES	
FRONT COLOR (BLUE)	2 BYTES	
BACK COLOR (RED)	2 BYTES	
BACK COLOR (GREEN)	2 BYTES	
BACK COLOR (BLUE)	2 BYTES	
ENVELOPE SIZE (W)	2 BYTES	SIZE IN PIXELS
ENVELOPE SIZE (H)	2 BYTES	
RESERVED DATA LENGTH	4 BYTES	
RESERVED DATA	VARIABLE	
DATA LOCATION	BYTE	1 DATA FIELD 2 FETCH DATA USING URL 3 OFFSET TO COMPONENT LOCATION (ABSOLUTE OFFSET)
DATA LENGTH	4 BYTES	LENGTH OF ALL SUB-COMPONENTS.
DATA	VARIABLE	

FIG. 7

FIELD	LENGTH	VALUES
COMPONENT ID	BYTE	
COMPONENT LENGTH	4 BYTES	
COMPONENT ATTRIBUTES	BYTE	1 INVISIBLE 2 FRONT 3 BACK
COMPONENT LOCATION (H)	2 BYTES	LOCATION ON SCREEN
COMPONENT LOCATION (V)	2 BYTES	
COMPONENT SIZE (W)	2 BYTES	SIZE IN PIXELS
COMPONENT SIZE (H)	2 BYTES	
DATA LOCATION	BYTE	1 DATA FIELD 2 FETCH DATA USING URL 3 OFFSET TO OTHER COMPONENT'S DATA LENGTH FILED (ABSOLUTE OFFSET) 4 GET DATA USING FTP
DATA LENGTH	4 BYTES	LENGTH OF ALL SUB-COMPONENTS
DATA	VARIABLE	

FIG. 8

FIELD	LENGTH	VALUES
SUB-COMPONENT ID	BYTE	
SUB-COMPONENT LENGTH	4 BYTES	
SUB-COMPONENT TYPE	BYTE	1 GIF 2 PROCESS 3 AUDIO 4 TEXT 5 VIDEO 6 POSIX : :
ATTRIBUTES	BYTE	0 NOTHING 1 PROCESS: LAUNCH APPLICATION 2 PROCESS: GOTO URL 3 PROCESS: SEND EMAIL 4 CONDITIONAL DISPLAY 5 CUSTOM RECEIPT 6 PROCESS FTP 1 GIF: FRONT BRUSH 2 GIF: BACK BRUSH 1 OPEN 2 COPY 3 PRINT : :
ID TYPE	BYTE	0 PRIMARY SUB-COMPONENT 1 ALTERNATE SUB-COMPONENT
ALTERNATE SUB-COMPONENT INDEX	BYTE	0 NO ALTERNATE SUB-COMPONENT OR INDEX NUMBER (SEQUENTIAL ORDER RELATIVE TO THE SAME COMPONENT.)

FIG. 9(a)

FIELD	LENGTH	VALUES
USER'S ACTION	BYTE	0 NOTHING 1 MOUSE OVER 2 MOUSE CLICK 3 MOUSE DOUBLE CLICK : :
DATA NAME LENGTH	4 BYTES	
DATA NAME	VARIABLE	ATTACHMENT NAME OR DATA NAME
DATA LOCATION	BYTE	1 ATTACHMENT LIST 2 DATA FIELD OFFSET TO OTHER SUB-COMPONENT'S DATA LENGTH FIELD. (ABSOLUTE OFFSET) 3 FETCH DATA USING URL 4 GET DATA USING FTP : :
DATA LENGTH	4 BYTES	
DATA	VARIABLE	DATA

FIG. 9(b)

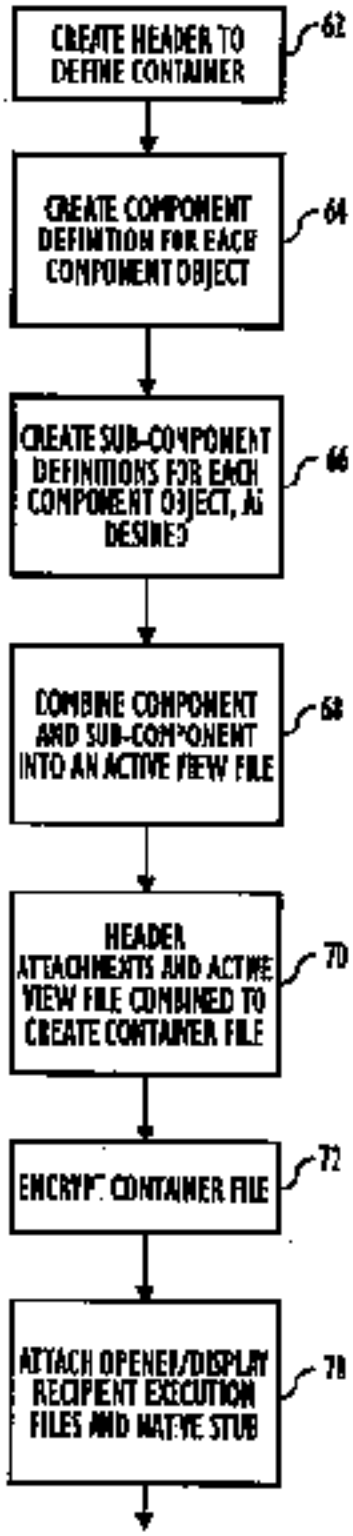
CREATE HEADER TO DEFINE CONTAINER
62
CREATE COMPONENT DEFINITION FOR EACH COMPONENT OBJECT
64
CREATE SUB-COMPONENT DEFINITIONS FOR EACH COMPONENT OBJECT, AS DESIRED
66
COMBINE COMPONENT AND SUB-COMPONENT INTO AN ACTIVE VIEW FILE
68
HEADER ATTACHMENTS AND ACTIVE VIEW FILE COMBINED TO CREATE CONTAINER FILE
70
ENCRYPT CONTAINER FILE
72
ATTACH OPENER/DISPLAY RECIPIENT EXECUTION FILES AND NATIVE STUB
74

FIG. 10(a)

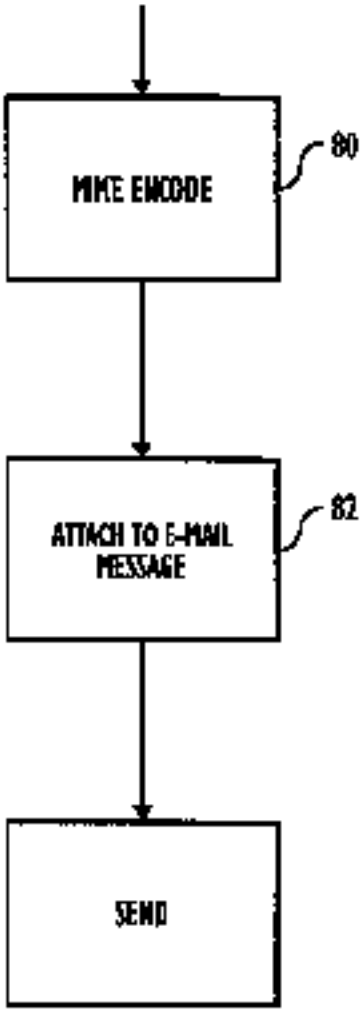

FIG. 10(b)

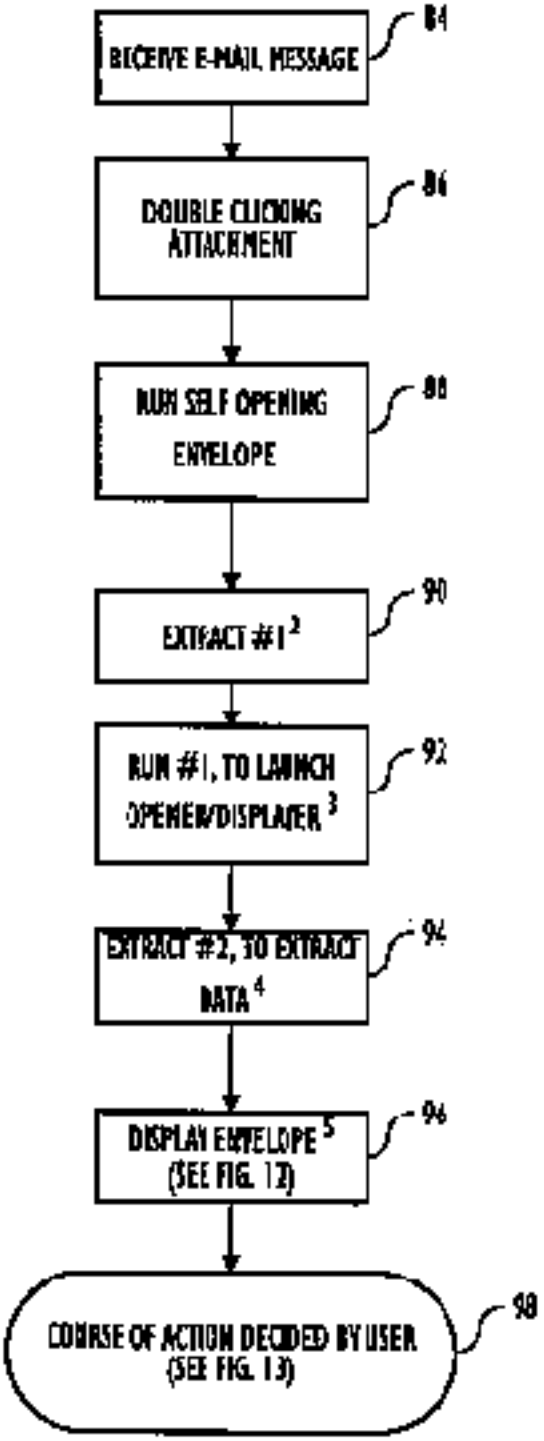
RECEIVE E-MAIL MESSAGE
84
DOUBLE CLICKING ATTACHMENT
86
RUN SELF OPENING ENVELOPE
88
EXTRACT #1 [2]
90
RUN #1, TO LAUNCH OPENER/DISPLAYER [3]
92
EXTRACT #2, TO EXTRACT DATA [4]
94
DISPLAY ENVELOPE [5] (SEE FIG. 12)
96
COURSE OF ACTION DECIDED BY USER (SEE FIG. 13)
98

FIG. 11

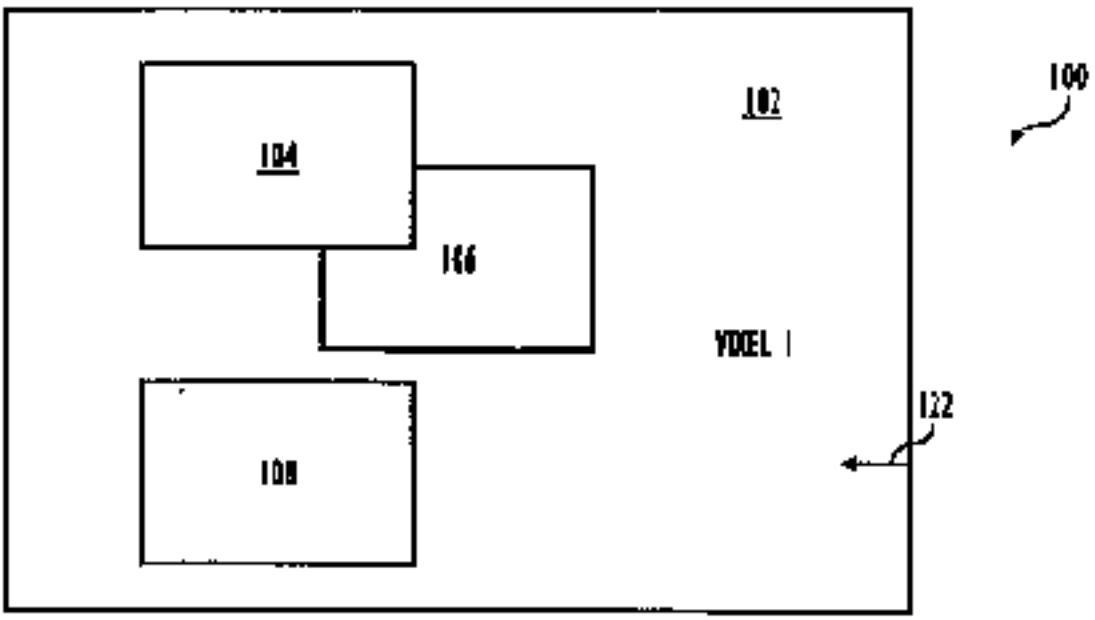
100
102
104
106
VOXEL 1
122
108

FIG.12

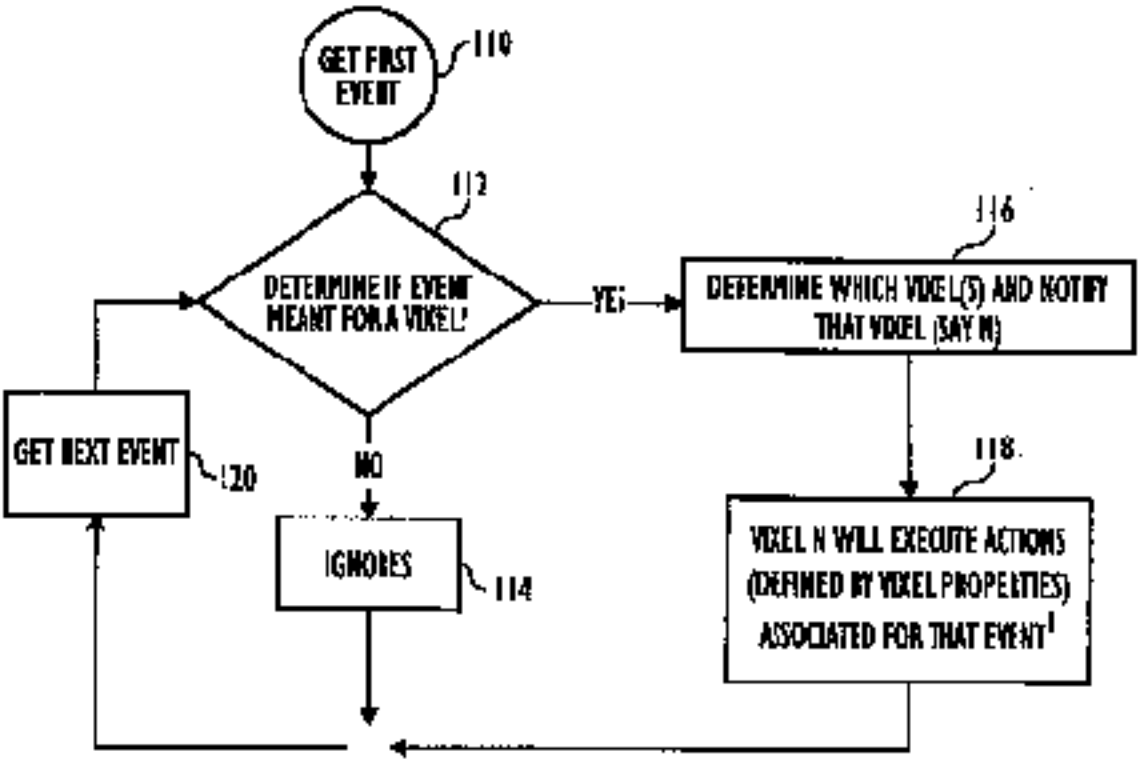
GET FIRST EVENT
110
112
DETERMINE IF EVENT MEANT FOR A VOXEL?
YES
116
DETERMINE WHICH VOXEL(S) AND NOTIFY THAT VOXEL (SAY N)
GET NEXT EVENT
120
NO
IGNORES
114
118
VOXEL N WILL EXECUTE ACTIONS (DEFINED BY VOXEL PROPERTIES) ASSOCIATED FOR THAT EVENT

FIG. 13

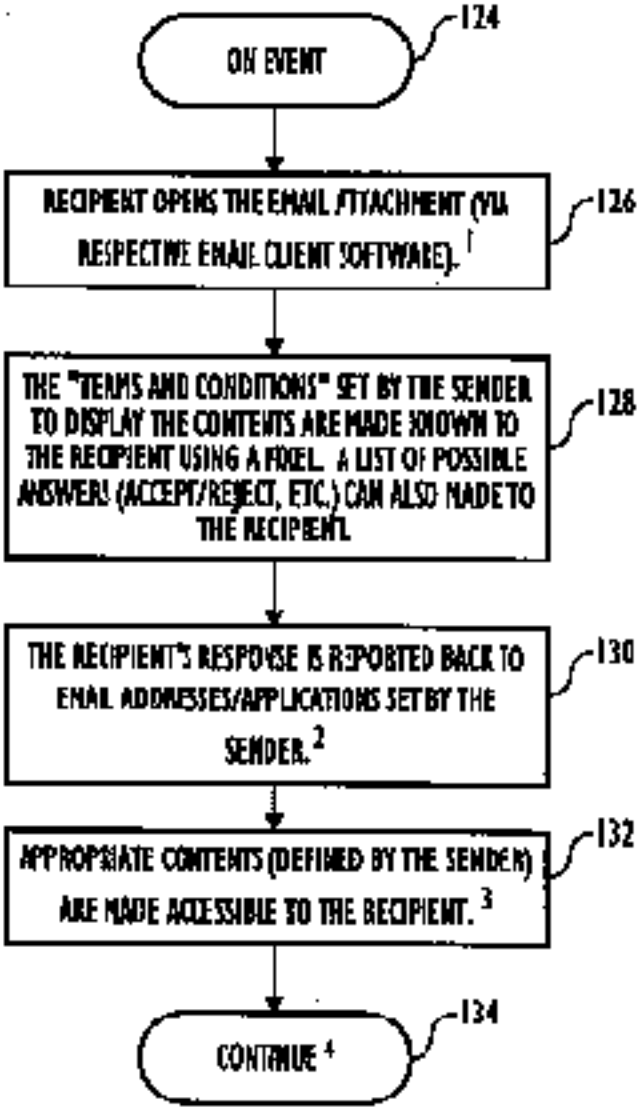
ON EVENT
124
RECIPIENT OPENS THE EMAIL /ATTACHMENT (VIA RESPECTIVE EMAIL CLIENT SOFTWARE). [1]
126
THE "TERMS AND CONDITIONS" SET BY THE SENDER TO DISPLAY THE CONTENTS ARE MADE KNOWN TO THE RECIPIENT USING A PIXEL. A LIST OF POSSIBLE ANSWERS (ACCEPT/REJECT, ETC.) CAN ALSO MADE TO THE RECIPIENT.
128
THE RECIPIENT'S RESPONSE IS REPORTED BACK TO EMAIL ADDRESSES/APPLICATIONS SET BY THE SENDER. [2]
130
APPROPRIATE CONTENTS (DEFINED BY THE SENDER) ARE MADE ACCESSIBLE TO THE RECIPIENT. [3]
132
CONTINUE [4]
134

FIG. 14

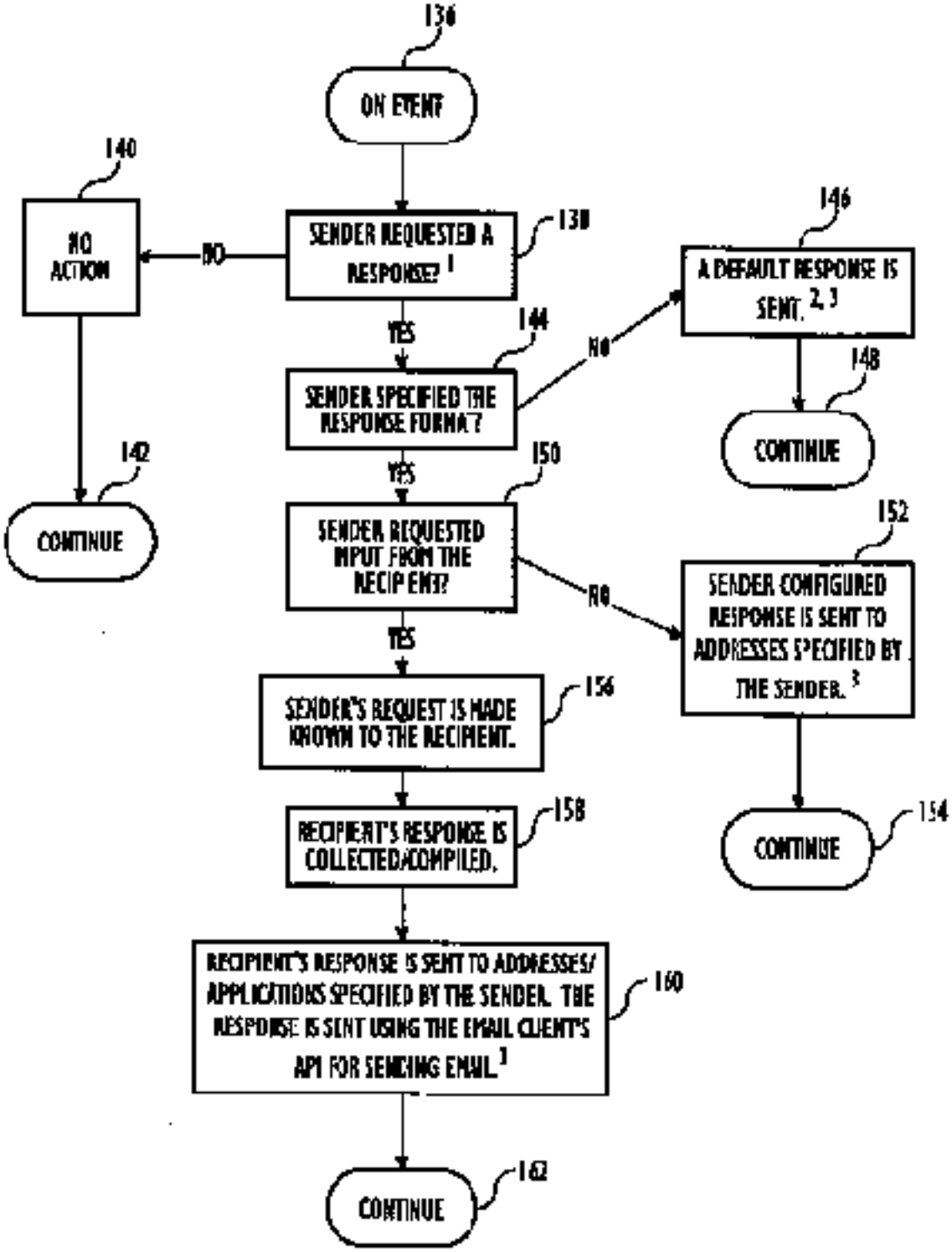
136
ON EVENT
140
NO ACTION
NO
SENDER REQUESTED A RESPONSE? 1
138
146
A DEFAULT RESPONSE IS SENT. 2, 3
YES
144
NO
SENDER SPECIFIED THE RESPONSE FORMAT?
148
CONTINUE
142
CONTINUE
YES
150
SENDER REQUESTED INPUT FROM THE RECIPIENT?
152
NO
SENDER CONFIGURED RESPONSE IS SENT TO ADDRESSES SPECIFIED BY THE SENDER. 3
YES
SENDER'S REQUEST IS MADE KNOWN TO THE RECIPIENT.
156
RECIPIENT'S RESPONSE IS COLLECTED/COMPILED.
158
CONTINUE
154
RECIPIENT'S RESPONSE IS SENT TO ADDRESSES/ APPLICATIONS SPECIFIED BY THE SENDER. THE RESPONSE IS SENT USING THE EMAIL CLIENT'S API FOR SENDING EMAIL. 3
160
CONTINUE
162

FIG. 15

FIELD	LENGTH	VALUES	DESCRIPTION
CHECKSUM	4 BYTES		
HEADER LENGTH	4 BYTES		
VERSION	4 BYTES		
FILE INFORMATION SIZE	4 BYTES		
FILE INFORMATION	VARIABLE	"FLATIRON ENVELOPE"	
CREATOR INFORMATION SIZE	4 BYTES		
CREATOR INFORMATION	VARIABLE	"POSTX"	
CONTAINER TYPE	BYTE	1	ENVELOPE
FRONT COLOR (RED)	2 BYTES	0	BLACK
FRONT COLOR (GREEN)	2 BYTES	0	
FRONT COLOR (BLUE)	2 BYTES	0	
BACK COLOR (RED)	2 BYTES	255	YELLOW
BACK COLOR (GREEN)	2 BYTES	255	
BACK COLOR (BLUE)	2 BYTES	0	
ENVELOPE SIZE (W)	2 BYTES	800	WIDTH IN PIXELS
ENVELOPE SIZE (H)	2 BYTES	600	HEIGHT IN PIXELS
RESERVED DATA LENGTH	4 BYTES		
RESERVED DATA	VARIABLE		
DATA LOCATION	BYTE	1	DATA FIELD
DATA LENGTH	4 BYTES		LENGTH OF ALL SUB-COMPONENTS.
DATA	VARIABLE		

FIG. 16(a)

FIELD	LENGTH	VALUES	DESCRIPTION
COMPONENT ID	BYTE	15	COMPONENT ID
COMPONENT LENGTH	4 BYTES		
COMPONENT ATTRIBUTES	BYTE	2	(FRONT)
COMPONENT LOCATION (X)	2 BYTES	100	(LOCATION ON SCREEN)
COMPONENT LOCATION (Y)	2 BYTES	500	
COMPONENT SIZE (W)	2 BYTES	50	(SIZE IN PIXELS)
COMPONENT SIZE (H)	2 BYTES	50	
DATA LOCATION	BYTE	1	DATA FIELD
DATA LENGTH	4 BYTES		LENGTH OF ALL SUB-COMPONENTS
DATA	VARIABLE		THE GIF FILE.

FIG. 16(b-1)

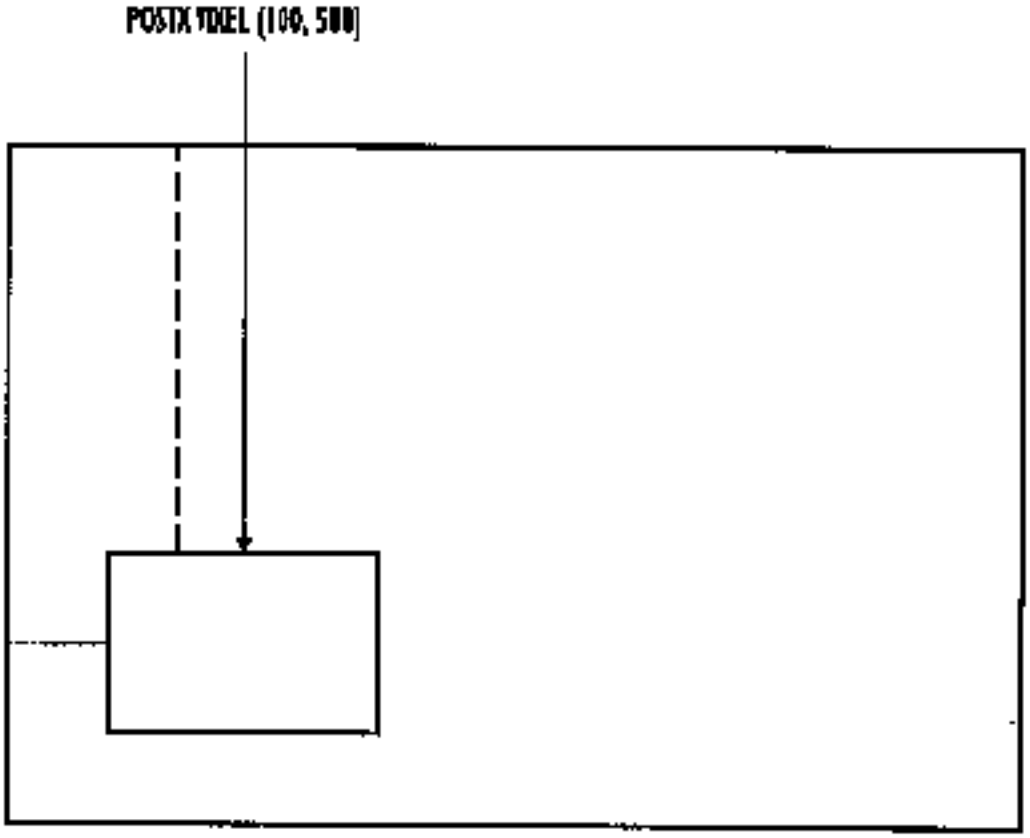

FIG. 16(b-2)

FIELD	LENGTH	VALUES	DESCRIPTION
SUB-COMPONENT ID	BYTE	160	SUB-COMPONENT ID
SUB-COMPONENT LENGTH	4 BYTES		
SUB-COMPONENT TYPE	BYTE	4	TEXT
ATTRIBUTES	BYTE	0	NOTHING
ID TYPE	BYTE	0	PRIMARY SUB-COMPONENT
ALTERNATE SUB-COMPONENT INDEX	BYTE	0	NO ALTERNATE SUB-COMPONENT
ACTION	BYTE	1	MOUSE OVER
DATA NAME LENGTH	4 BYTES		
DATA NAME	VARIABLE	"BUBBLE.TXT"	ATTACHMENT NAME
DATA LOCATION	BYTE	1	ATTACHMENT LIST
DATA LENGTH	4 BYTES	0	
DATA	VARIABLE	NO DATA	

FIG. 16(c-1)

FIELD	LENGTH	VALUES	DESCRIPTION
SUB-COMPONENT ID	BYTE	160	SUB-COMPONENT ID
SUB-COMPONENT LENGTH	4 BYTES		
SUB-COMPONENT TYPE	BYTE	3	AUDIO
ATTRIBUTES	BYTE	1	PROCESS: LAUNCH APPLICATION
ID TYPE	BYTE	0	PRIMARY SUB-COMPONENT
ALTERNATE SUB-COMPONENT INDEX	BYTE	0	NO ALTERNATE SUB-COMPONENT
ACTION	BYTE	1	MOUSE OVER
DATA NAME LENGTH	4 BYTES		
DATA NAME	VARIABLE	"SIGNATURE.WAV"	ATTACHMENT NAME
DATA LOCATION	BYTE	1	ATTACHMENT LIST
DATA LENGTH	4 BYTES	0	
DATA	VARIABLE	NO DATA	

FIG. 16(c-2)

FIELD	LENGTH	VALUES	DESCRIPTION
SUB-COMPONENT ID	BYTE	160	SUB-COMPONENT ID
SUB-COMPONENT LENGTH	4 BYTES		
SUB-COMPONENT TYPE	BYTE	2	PROCESS
ATTRIBUTES	BYTE	2	PROCESS: GO TO URL
ID TYPE	BYTE	0	PRIMARY SUB-COMPONENT
ALTERNATE SUB-COMPONENT INDEX	BYTE	3	(INDEX OF ALTERNATE SUB-COMPONENT)
ACTION	BYTE	2	MOUSE CLICK
DATA NAME LENGTH	4 BYTES		
DATA NAME	VARIABLE	"POSTWWL..TXT"	ATTACHMENT NAME
DATA LOCATION	BYTE	1	ATTACHMENT LIST
DATA LENGTH	4 BYTES	0	
DATA	VARIABLE	NO DATA	

FIG. 16(c-3)

FIELD	LENGTH	VALUES	DESCRIPTION
SUB-COMPONENT ID	BYTE	77	SUB-COMPONENT ID
SUB-COMPONENT LENGTH	4 BYTES		
SUB-COMPONENT TYPE	BYTE	2	PROCESS
ATTRIBUTES	BYTE	0	PROCESS: LAUNCH APPLICATION (TO DISPLAY TEXT)
ID TYPE	BYTE	1	ALTERNATE SUB-COMPONENT
ALTERNATE SUB-COMPONENT INDEX	BYTE	0	NO ALTERNATE SUB-COMPONENT
ACTION	BYTE	2	MOUSE CLICK
DATA NAME LENGTH	4 BYTES		
DATA NAME	VARIABLE	"ALTERNATE.TXT"	ATTACHMENT NAME
DATA LOCATION	BYTE	1	ATTACHMENT LIST
DATA LENGTH	4 BYTES	0	
DATA	VARIABLE	NO DATA	

FIG. 16(c-4)

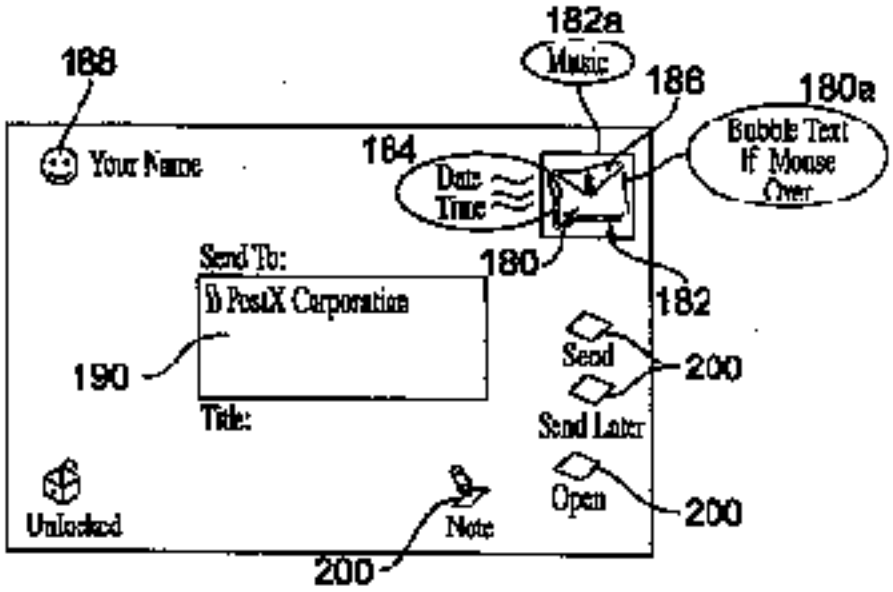

FIG. 17(a)

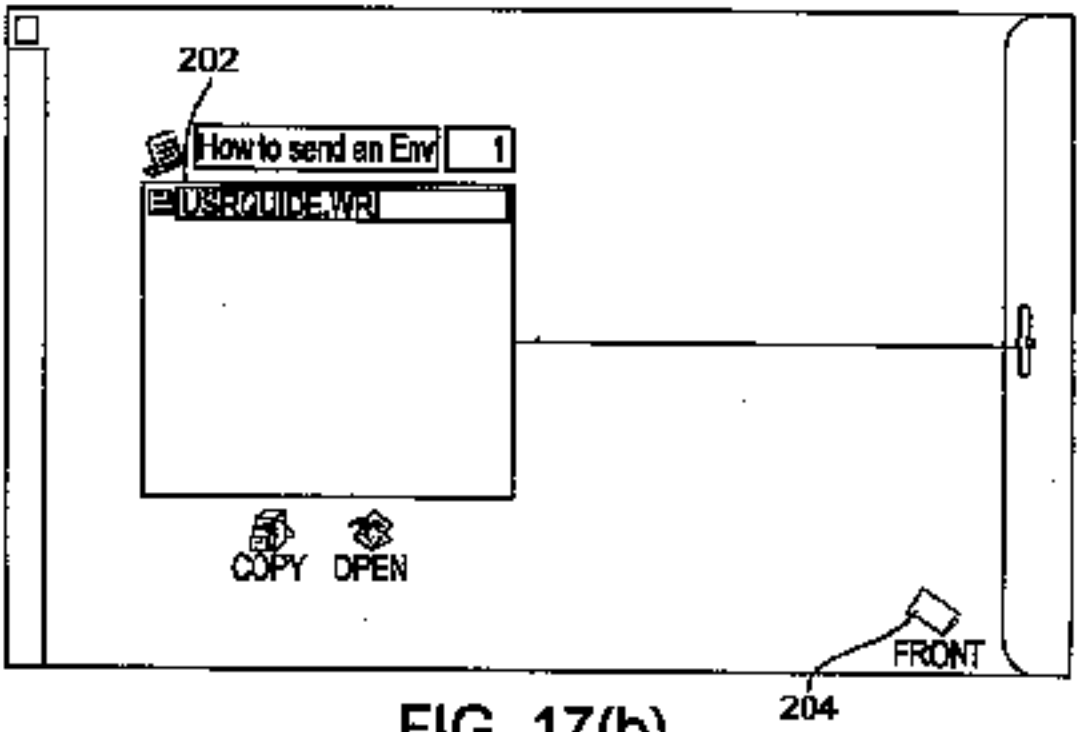

FIG. 17(b)

206

FIG. 17(c)

208

PostX is a company located in Cupertino, CA.

FIG. 17(d)

INTERNATIONAL SEARCH REPORT

In. ational application No.
PCT/US 98/08236

A. CLASSIFICATION OF SUBJECT MATTER
IPC 6 G06F17/60

According to International Patent Classification (IPC) or to both national classification and IPC

B. FIELDS SEARCHED

Minimum documentation searched (classification system followed by classification symbols)
IPC 6 G06F

Documentation searched other than minimum documentation to the extent that such documents are included in the fields searched

Electronic data base consulted during the international search (name of data base and, where practical, search terms used)

C. DOCUMENTS CONSIDERED TO BE RELEVANT

Category *	Citation of document, with indication, where appropriate, of the relevant passages	Relevant to claim No.
X	"REAL" MAIL USER INTERFACE FOR IN-BASKET" IBM TECHNICAL DISCLOSURE BULLETIN, vol. 31, no. 10, 1 March 1989, page 171/172 XP000112429 see page 172, line 1 - line 6 -/--	1-5, 17-23

[X] Further documents are listed in the continuation of box C.

[X] Patent family members are listed in annex.

* Special categories of cited documents :

"A" document defining the general state of the art which is not considered to be of particular relevance

"E" earlier document but published on or after the international filing date

"L" document which may throw doubts on priority claim(s) or which is cited to establish the publication date of another citation or other special reason (as specified)

"O" document referring to an oral disclosure, use, exhibition or other means

"P" document published prior to the international filing date but later than the priority date claimed

"T" later document published after the international filing date or priority date and not in conflict with the application but cited to understand the principle or theory underlying the invention

"X" document of particular relevance; the claimed invention cannot be considered novel or cannot be considered to involve an inventive step when the document is taken alone

"Y" document of particular relevance; the claimed invention cannot be considered to involve an inventive step when the document is combined with one or more other such documents, such combination being obvious to a person skilled in the art.

"&" document member of the same patent family

Date of the actual completion of the international search	Date of mailing of the international search report
10 August 1998	20/08/1998
Name and mailing address of the ISA European Patent Office, P.B. 5818 Patentlaan 2 NL - 2280 HV Rijswijk Tel. (+31-70) 340-2040, Tx. 31 651 epo nl, Fax: (+31-70) 340-3016	Authorized officer Suendermann, R

Form PCT/ISA/210 (second sheet) (July 1992)

INTERNATIONAL SEARCH REPORT

Intl. Appl. No. PCT/US 98/08236

C.(Continuation) DOCUMENTS CONSIDERED TO BE RELEVANT

Category*	Citation of document, with indication, where appropriate, of the relevant passages	Relevant to claim No.
X	MING OUHYOUNG ET AL: "The NOS multimedia E-mail system" PROCEEDINGS OF THE INTERNATIONAL CONFERENCE ON MULTIMEDIA COMPUTING AND SYSTEMS (CAT. NO.94TH0631-2), PROCEEDINGS OF IEEE INTERNATIONAL CONFERENCE ON MULTIMEDIA COMPUTING AND SYSTEMS, BOSTON, MA, USA, 15-19 MAY 1994, pages 315-324, XP002073636 ISBN 0-8186-6530-5, 1994, Los Alamitos, CA, USA, IEEE Comput. Soc. Press, USA see abstract	25-31
A	EP 0 674 466 A (IBM) 27 September 1995 see abstract; claim 1 see column 6, line 55 - column 7, line 32; figure 7	1,17,25
A	US 5 438 660 A (LEE RAYMOND E ET AL) 1 August 1995 see column 1, line 52 - column 2, line 5 see abstract; claim 1; figures 1-5	1,17,25

1

Form PCT/ISA/210 (continuation of second sheet) (July 1992)

INTERNATIONAL SEARCH REPORT

Information on patent family members

Intl. application No.
PCT/US 98/08236

Patent document cited in search report	Publication date	Patent family member(s)	Publication date
EP 0674408 A	27-09-1995	US 5490244 A	06-02-1996
		JP 2625649 B	02-07-1997
		JP 7271689 A	20-10-1995
US 5438660 A	01-08-1995	EP 0564387 A	06-10-1993
		JP 2519385 B	31-07-1996
		JP 6083561 A	25-03-1994